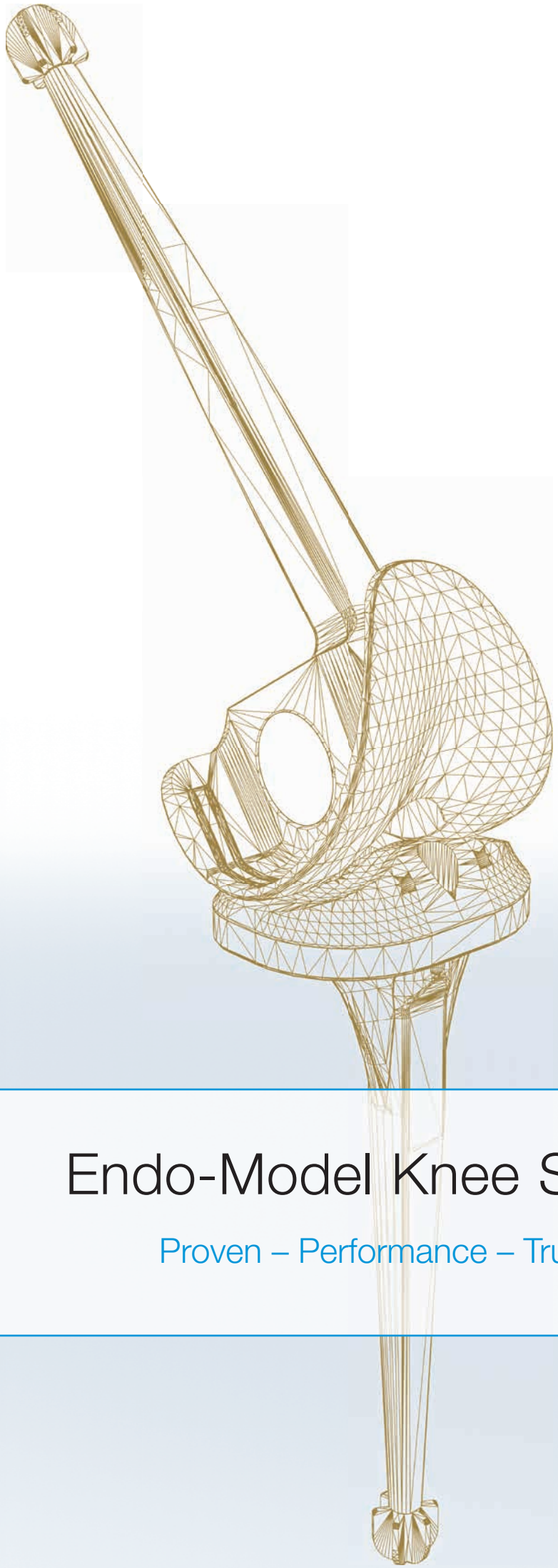

Endo-Model Knee System

Proven – Performance – Trusted

Product Rationale

CE 0482

Explanation of Pictograms			
	Manufacturer	REF	Article number
MAT	Material (number)	CE	Product meets the applicable requirements, which are regulated in the EU harmonization legislation for the affixing of the CE marking.

Proven Performance Trusted

“Simplicity is the ultimate sophistication”

Leonardo Da Vinci

The **Endo-Model Knee System** was introduced in 1979 and since then, the system has had a proven clinical heritage[1,2]. This has allowed LINK to produce the most used rotating hinge knee in many markets[3]. The Endo-Model has many reports of outstanding long-term results[1,4,5] such as **98.5% survival rate after 15 years**[4].

Based on the unchanged core design,[7] the Endo-Model Knee System has intrinsic stability[1,6,8] with excellent kinematics functions[9]. The Endo-Model Knee System offers a comprehensive portfolio including cemented and cementless stems together with a straightforward procedure.[2,10]

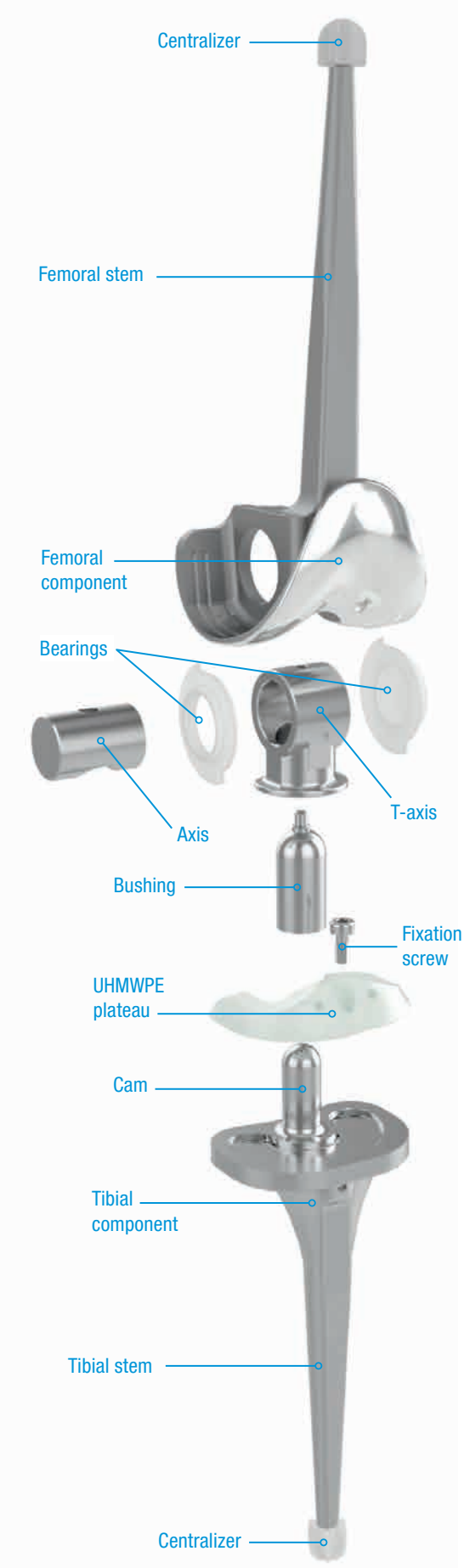

Rotating Hinge Knee

The **Endo-Model Rotating Hinge Knee** consists of different parts: a femoral component, a tibial component, a UHMWPE plateau with fixation screw, bearings and a cross joint consisting of the bushing, T-axis, axis and the cam on the tibia.

Femoral component: The stem of the femoral component has a 6° valgus angle to fit the anatomical axis. The thickness of the condyles is 3 mm.[7]

Cross joint: The cross joint consists of the bushing, T-axis, axis and the cam on the tibia plateau. These parts of the Endo-Model Knee System allow the various ranges of movement. The cam on the tibia is located 18 mm posterior to the anatomical axis and femoral stem. This allows for good flexion of the implant.[7] At the anterior part of the T-axis is a small UHMWPE bumper. This design ensures that there is no metal-on-metal contact between the femoral and tibial component.[7]

Bearings: The bearings of UHMWPE protect the sides of the cross joint against cement inflow.[7]

Tibial plateau: The tibial plateau is the sliding partner for the femoral component and it is made from UHMWPE. The tibial plateau is fixed with a screw on the tibial component. In the medial section part of the plateau is an elevation on the plateau. This elevation fits positively against the shape of the femoral component (form fit).[7]

Fixation screw: The UHMWPE plateau is held and secured by the self-locking fixation screw.

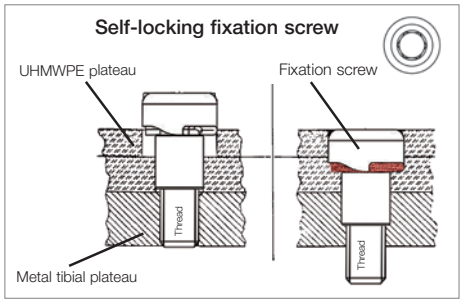

Note:
Tibial component: In the middle of the posterior part of the tibial component is the cam of the cross joint. The cam is 18 mm posterior to the axis of the tibial stem.[7]

Centralizers: Due to the shape of the centralizers, they slide into the soft cement. This allows a central position of the stem in the medullary canal. Additionally, the centralizers prevent contact between the metal stem and the corticalis and therefore stress peaks in the bone in case of a bending load.[7]

Stem: The cross section of the cemented stem offers resistance in the cement against torque.

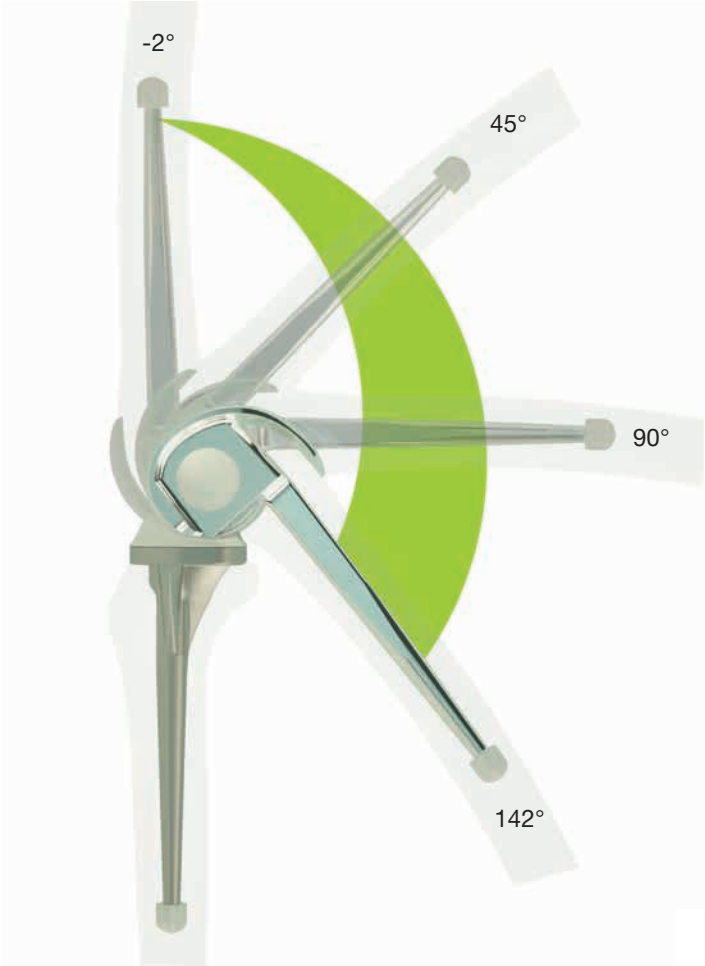

There are **two different types of movements** (rotation and flexion) within the Endo-Model Rotating Hinge Knee System. The flexion is possible because the T-axis can move around the axis in the transverse plane. Because of this, a ROM from -2° up to 142° is possible.[7]

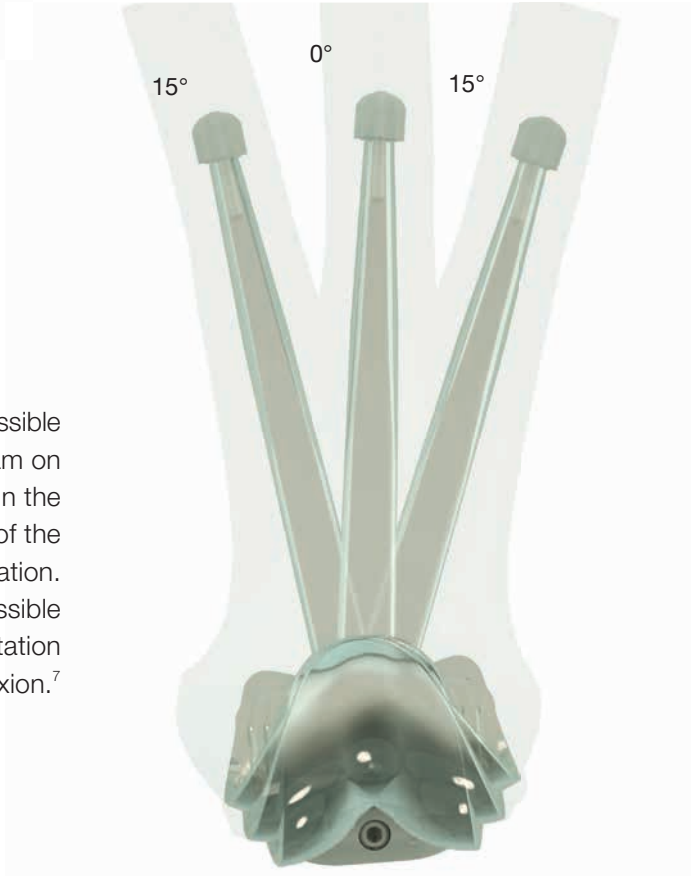

The rotation (vertical plane) is possible because of the bushing and the cam on the tibia. The polished cam sits in the metal-jacket UHMWPE bushing of the cross joint and allows rotation. This mechanism provides for a possible maximum internal and external rotation of 15° at 20° to 30°of flexion.[7]

The **Endo-Model Knee System** has no rotation in extension. This is thanks to the form fit between the anterior shape of the UHMWPE plateau and the femoral condyles in extension. Therefore the Endo-Model Knee System ensures high stability in extension. Rotation becomes possible after only 5° of flexion.[7]

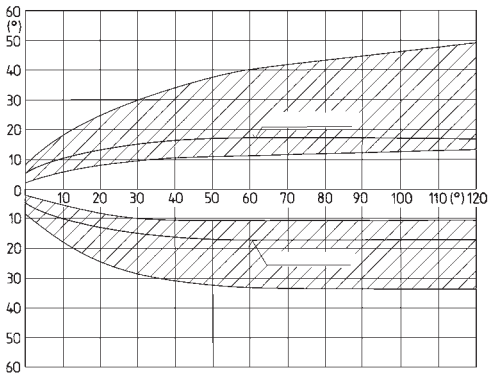

The extent of free rotation is a function of flexion, as is the region of smoothly slowed down rotation (for constructional reasons) (hatched area).

Engelbrecht E.: Die Rotationsendoprothese des Kniegelenks, Springer-Verlag 1984, ISBN: 978-3-642-69819-4 (Print) 978-3-642-69818-7 (Online)

Anti-Luxation Device

The tibial plateau is attached to the inserter and slides between the femoral and tibial components into the joint so that the plateau chamber grips over the flange. It must be ensured that the dovetail-shaped incision (fig. **A**) on the bottom of the UHMWPE plateau locks into the peripheral groove on the metal tibial support. The capsolus apparatus, the muscles and the body weight also prevent a luxation of the implant.[7]

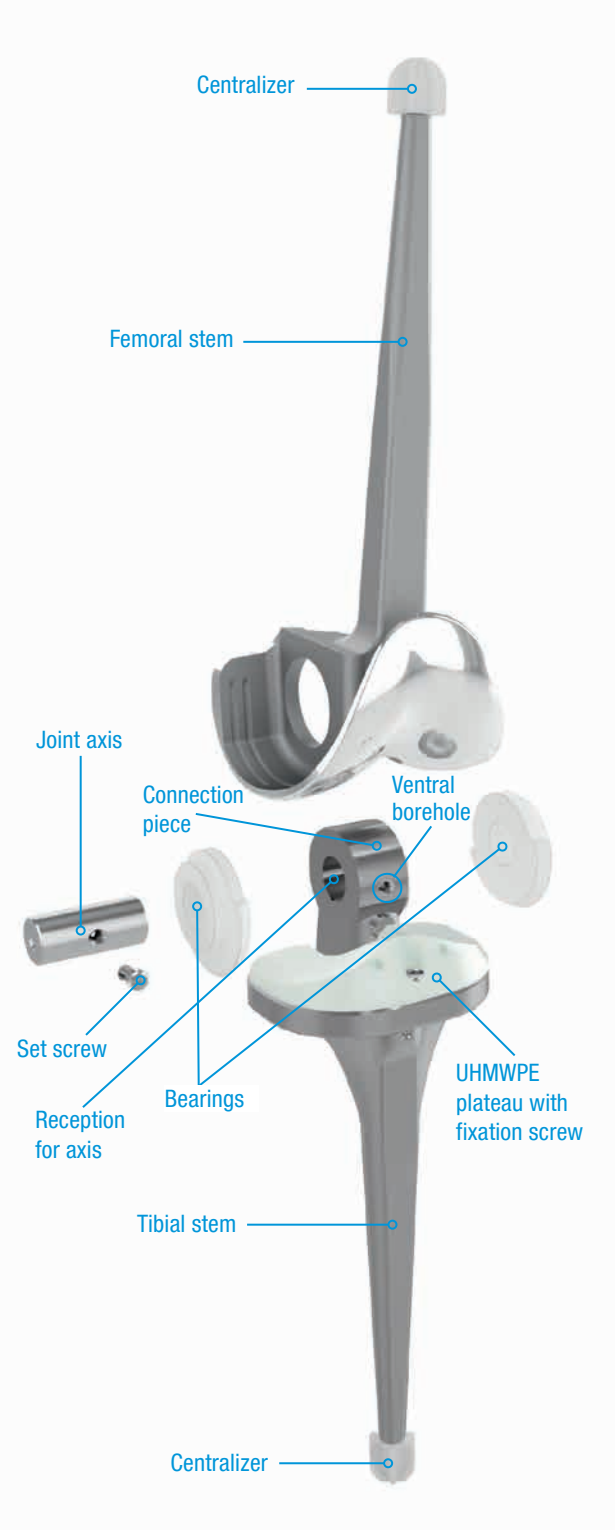

Pure Hinge Knee

The external shape, dimensions and sizes of the **Endo-Model Pure Hinge Knee Prosthesis** correspond to the **Endo-Model Rotating Hinge Knee Prosthesis**. As the implant beds required for the pure hinge and rotating hinge versions are identical, the decision whether to use a rotating hinge or a more stabilizing pure hinge knee prosthesis can be made intraoperatively.

The pure hinge connecting component, which sits on the tibial component and links it to the femoral component of the pure hinge knee prosthesis, features a borehole for the joint axis. The ventral borehole is provided for the set screw, whose tip fits into the recess at the axis. Once the upper and lower components have been joined, the axis is secured with the set screw.

From inside the intracondylar box, polyethylene bearings for the prosthesis axis are pushed into the medial and lateral recesses. The upper and lower prosthesis components are joined by introducing the tibial connecting piece into the intracondylar box of the femoral component, such that the prosthesis axis can be inserted (always from the medial aspect). Articulation takes place between the prosthesis axis and the two bearings.

The **Endo-Model Pure Hinge Knee Prosthesis** is delivered already assembled.

The package contains two sterile trial bearings. These are inserted into the femoral prosthesis component during surgery; after the trial run, they are exchanged for the definitive bearings. These too can be exchanged, if necessary, in a second intervention. The pure hinge has only two possible movements: flexion and extension. This allows movement in the sagittal plane. The femoral and tibial component of the pure hinge are exactly the same as in the rotating hinge.

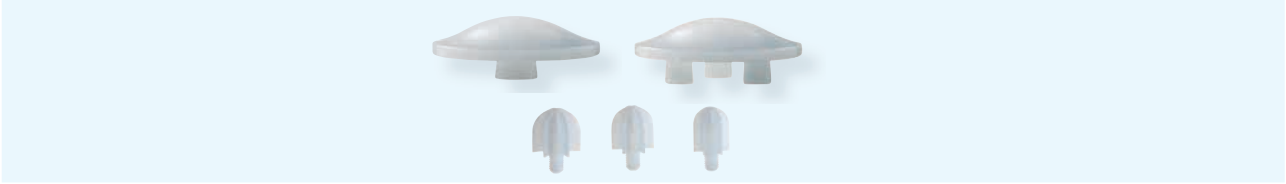

Endo-Model Standard	Endo-Model – M	MEGASYSTEM-C Endo-Model Modular Joint Components

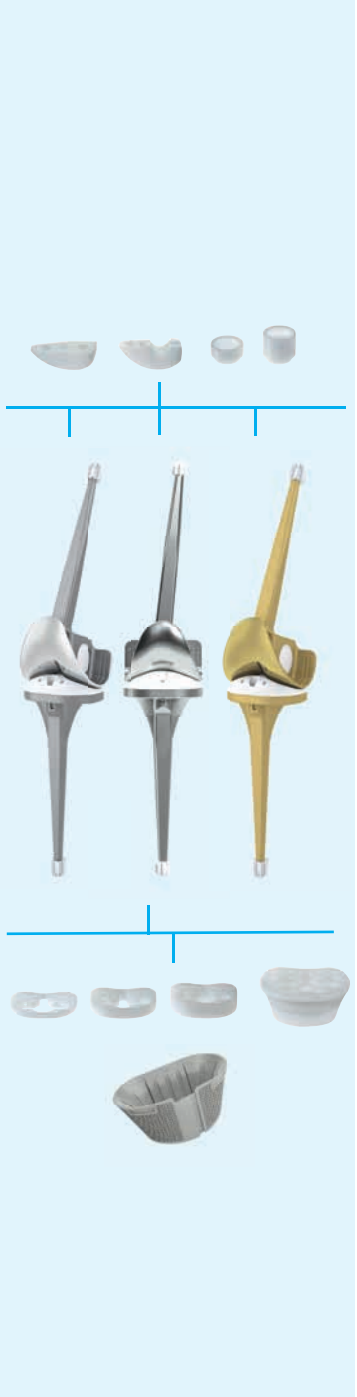

Endo-Model Standard

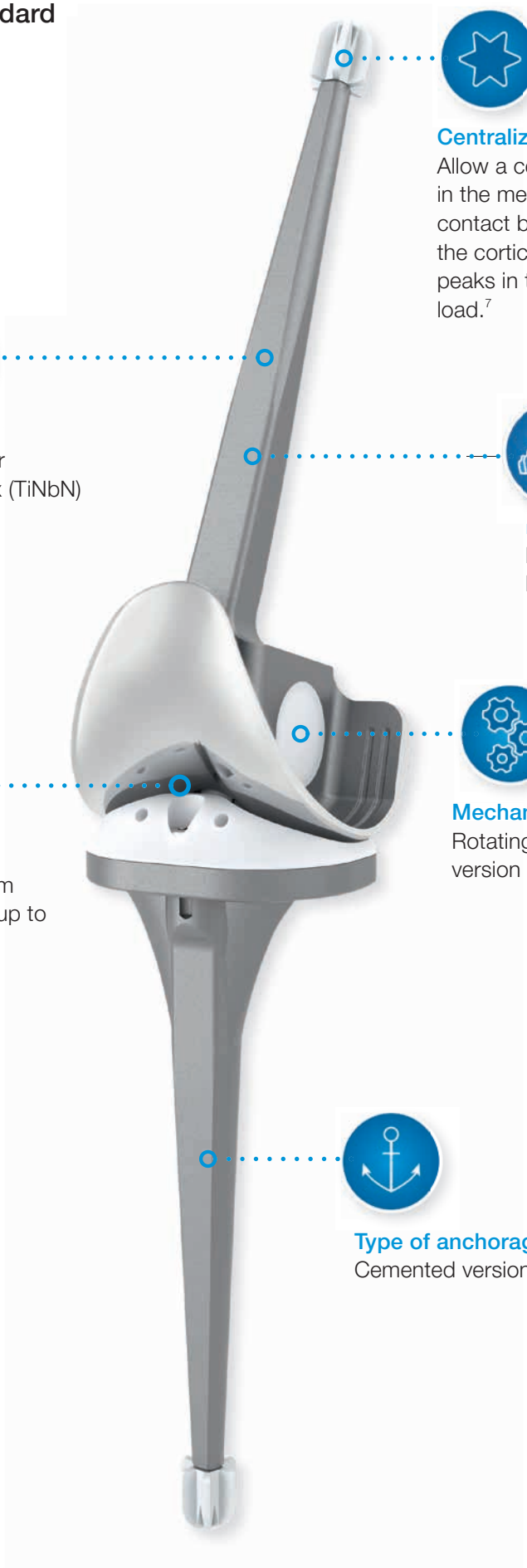

Centralizers:
Allow a central position of the stem in the medullary canal. This prevents contact between the metal stem and the corticalis and therefore stress peaks in the bone in case of bending load.[7]

Material:
CoCrMo, or LINK PorEx (TiNbN) coated.

Range of sizes:
Four different sizes (XS, S, M, L).
No crossover sizing possible!

Mechanism:
Rotating hinge or pure hinge version available.

Range of motion:
A range of motion from 2° of hyperextension up to 142° of flexion.

Type of anchorage:
Cemented version only.

Endo-Model – M

Type of anchorage:
Cemented or cementless stems.

Material:
CoCrMo, or LINK PorEx (TiNbN) coated.

Range of sizes:
Four different sizes (XS, S, M, L). **No crossover sizing possible**!

Mechanism:
Rotating hinge or pure hinge version available.

Range of motion:
Range of motion from 2° of hyperextension up to 142° of flexion.

Range of sizes:
- Conical, cemented (EndoDur-S, LINK PorEx coated): 50 – 280 mm
- Conical, cementless (Tilastan-S): 50 – 280 mm (Ø 16 mm)
- Cylindrical, cementless (Tilastan-S): 60 – 280 mm (each size in the following diameters: Ø 10 – 18 mm)

Centralizers:
Allow a central position of the stem in the medullary canal, prevent contact between the metal stem and the corticalis and therefore stress peaks in the bone in case of bending load.[7]

Endo-Model Standard/Endo-Model – M
with **LINK PorEx** coating for metal-sensitive patients

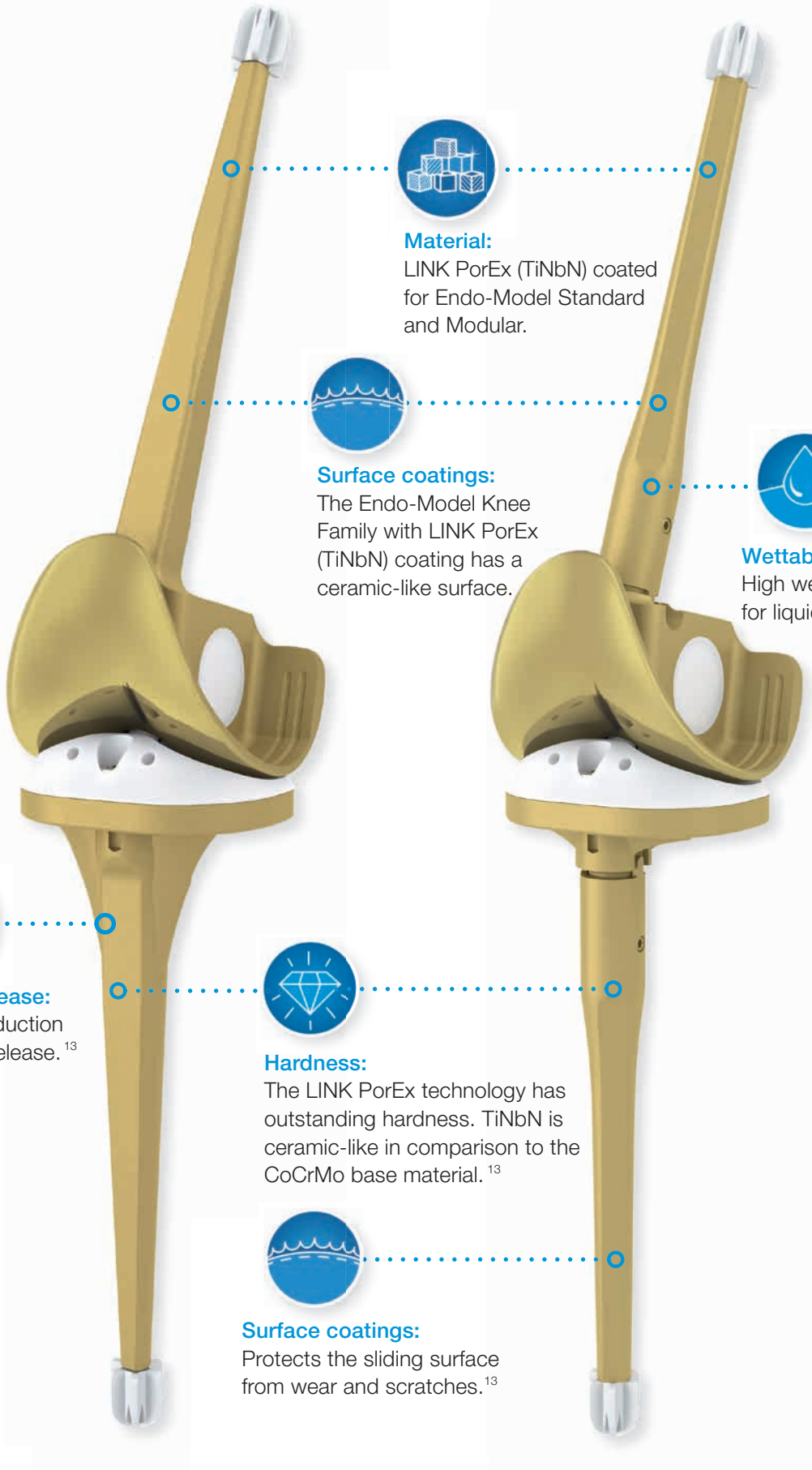

Material:
LINK PorEx (TiNbN) coated for Endo-Model Standard and Modular.

Surface coatings:
The Endo-Model Knee Family with LINK PorEx (TiNbN) coating has a ceramic-like surface.

Wettability:
High wettability for liquids. [13]

Metal ion release:
Significant reduction of metal ion release. [13]

Hardness:
The LINK PorEx technology has outstanding hardness. TiNbN is ceramic-like in comparison to the CoCrMo base material. [13]

Surface coatings:
Protects the sliding surface from wear and scratches. [13]

MEGASYSTEM-C Endo-Model Modular Joint Components:
Condylar replacement and intracondylar version

Compatible with...

Endo-Model – W and MEGASYSTEM-C stems

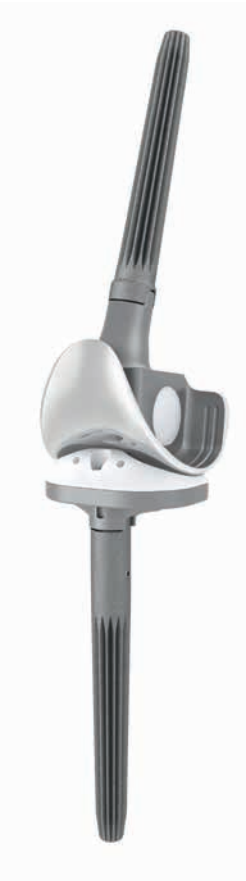

Endo-Model standard tibia

MEGASYSTEM-C portfolio on the femoral side

Endo-Model Modular Joint Components:
Endo-Model – M and Endo-Model – W, different tapers

Compatible with MEGASYSTEM-C,
push-through stems and modular stems

AORI Classification of Bone Defects

Type 1 defect:
In a Type 1 defect the metaphysis has intact bone. The defects have no effect on the stability of the implant. [12]

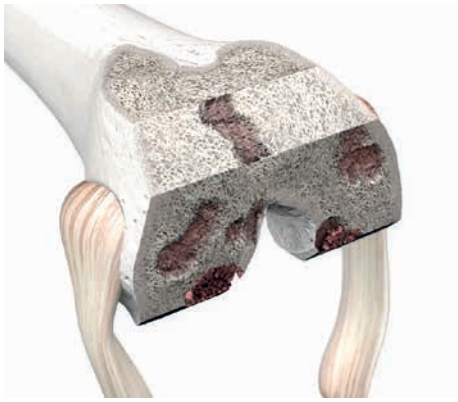

Type 2a defect:
In a Type 2a defect only one condylar side is concerned. Normally a primary knee implant can solve the defects. To balance the defect, it is possible to use modular augments. The augments are also helpful for restoring the joint line. [12]

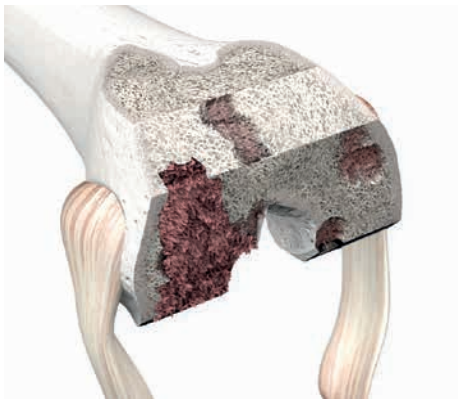

Type 2b defect:
In a Type 2b defect both condylar sides are concerned. It is necessary to reconstruct the bone with cement, augments or with bone. Reasons for a Type 2b defect can be multiple revisions or a failure of stemmed femoral components. [12]

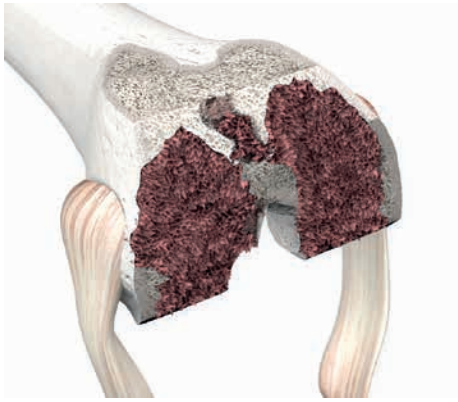

Type 3 defect:
In a Type 3 defect it is possible that one or both condyles have significant structural bone loss. With hinged prostheses it is possible to reconstruct the bone. It is important to restore the normal joint line. Therefore a plateau with normal thickness is very helpful. [12]

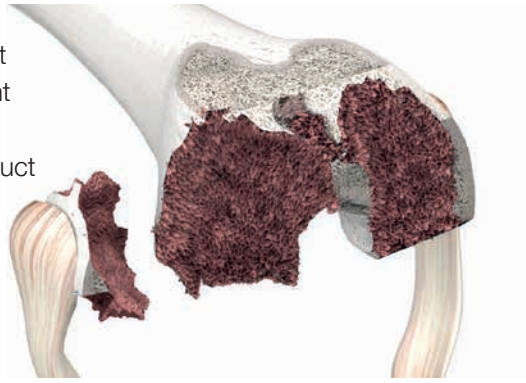

Fixation in Revision Cases

For a solid anchorage, the implant should be fixed in at least two of three zones. **Zone 1** is the epiphysis (joint surface), **Zone 2** is the metaphysis and **Zone 3** is the diaphysis. Most revision knee systems provide 2-zone fixation in Zone 1 and Zone 3. The Endo-Model Knee System provides a fixation in Zone 2 as well. It is possible to have fixation in the following zones:

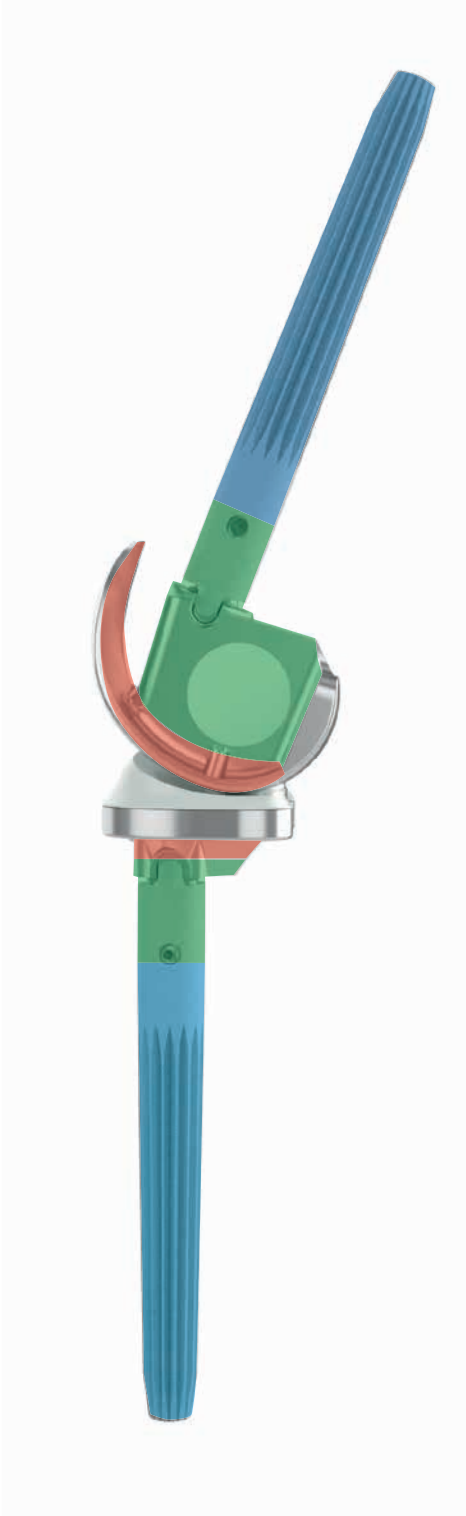

Zone 1 fixation:

The illustration shows fixation with cement. It is also possible to use cement, bone grafts or metal augments in bone defects. In these cases it is necessary to have at least one additional fixation in another zone to gain stability. [11]

Zone 2 fixation:

LINK offers TrabecuLink Femoral and Tibial Cones (TiAl6V4). The cones have high primary stability in the meta-physeal region, both for the cone itself and for the tibial component in the cone.
This allows good Zone 2 fixation. The metaphyseal fixation between prosthesis and cone is achieved using cement. [11]

Zone 3 fixation:

Zone 3 fixation can be achieved with diaphyseal stems. Zone 3 fixation can off-load the metaphysis and reduce risk of implant cement mantle failure. [11]

With the Endo-Model Rotating Hinge, it is possible to change only the bushing or rather the entire mechanism. It is not necessary to change the entire implant in case of bushing failure.

Rotating Hinge Mechanism – Previous Version (V01)

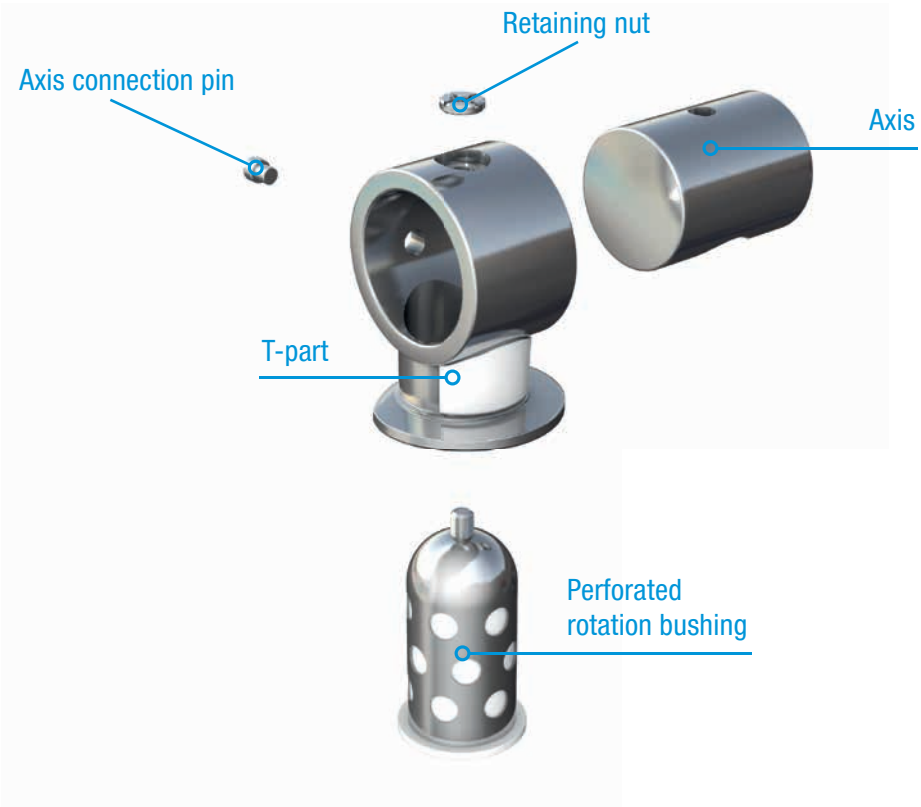

Rotating Hinge Mechanism – Current Version (V02)

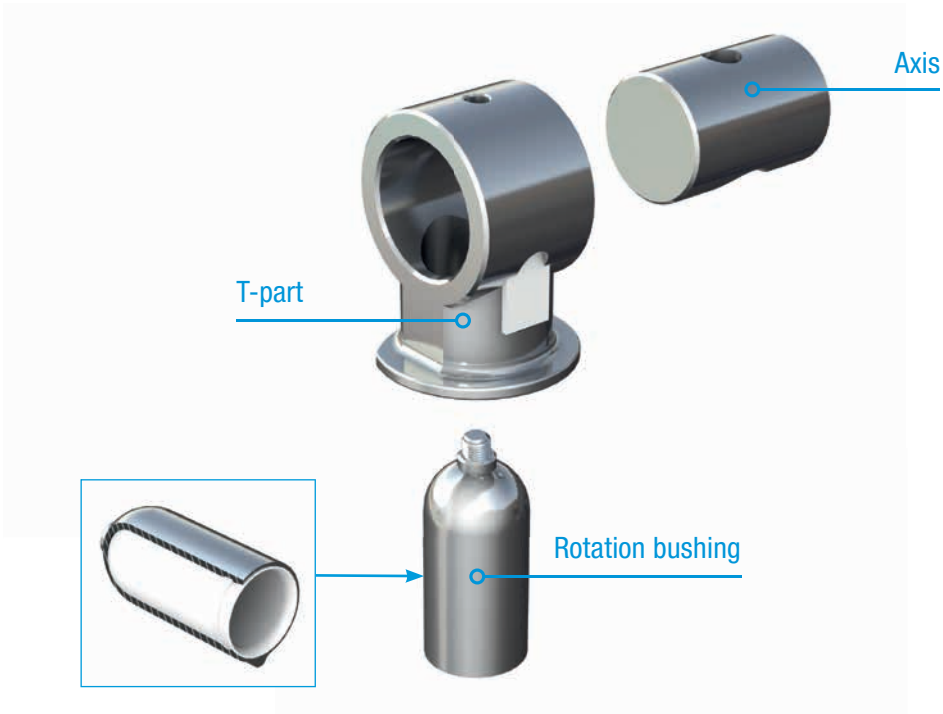

LINK offers four different bushing exchange possibilities:

1. Change from the previous (perforated) bushing V01 to the current bushing V02 (rotating hinge):

It is possible to change from the bushing V01 to the bushing V02. This is possible because the femoral component is unchanged. For this kind of change it is necessary to drill through the condyles to get access to the axis. Afterwards the bushing V01 can be removed and the bushing V02 can be inserted.

2. Change only the bushing (rotating hinge):

For both bushing systems, it is possible to change only the bushing. Here it is not necessary to drill through the condyles. With the new bushing the only step is to unscrew the bushing and remove it from the femur.

3. Change the whole cross joint (rotating hinge):

It is necessary to drill through the condyles. This step is mandatory to get access to the cross joint.

4. Change to pure hinge:

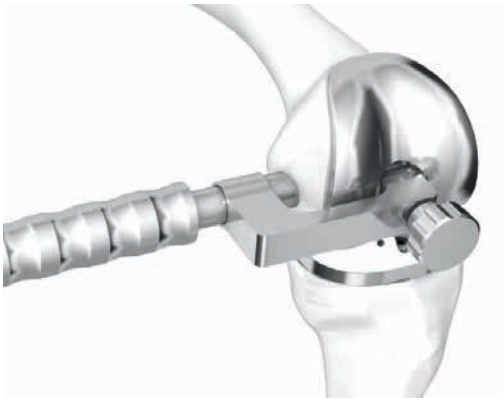

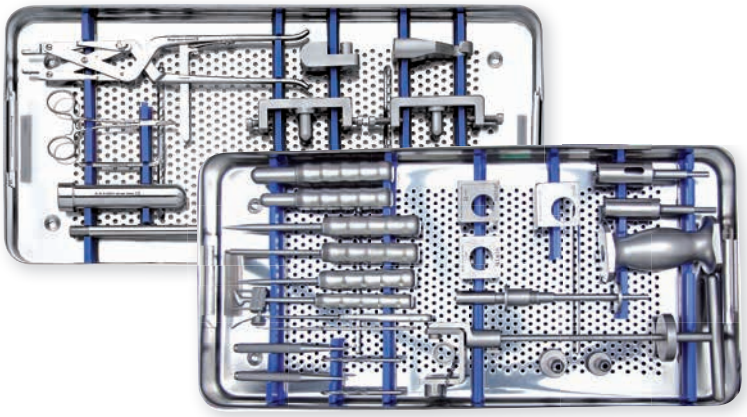

Instrument set for bushing exchange

History of the Endo-Model Knee System

Proven over 40 years:
The Endo-Model Knee System was developed in 1979. Since then, the core design of the implant is still unchanged. Because of this, the Endo-Model Knee System has a long and proven heritage.

1969

First Generation of the St. Georg
Only one size of implant. Stems were straight without valgus angle in the femur.

1975

Third Generation of the St. Georg
First implant with support for the condyles and the femoral stem has a 6° valgus angle.

1979

Endo-Model
The core design of the Endo-Model as it is known today was born.

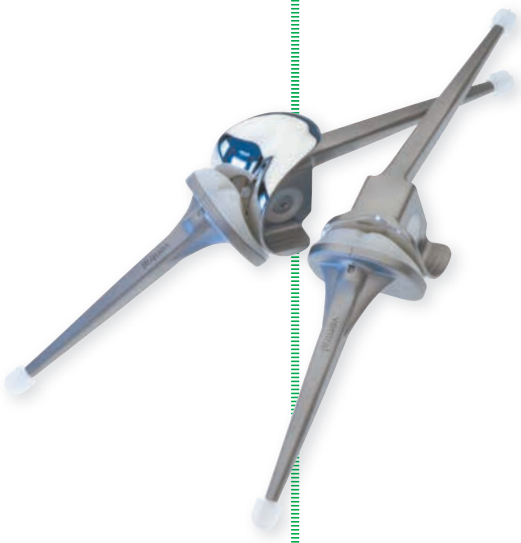

1992

Endo-Model – M
LINK established the Endo-Model Modular System. This system has the option of using cemented and cementless stems compatible with the MEGASYSTEM-C.

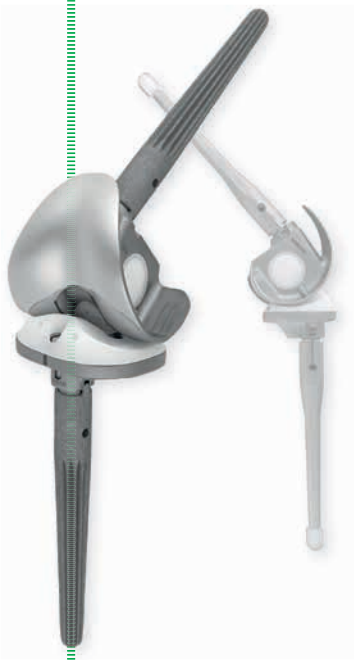

1970 1990

2008

Endo-Model – W

This system is fully compatible with the MEGASYSTEM-C.

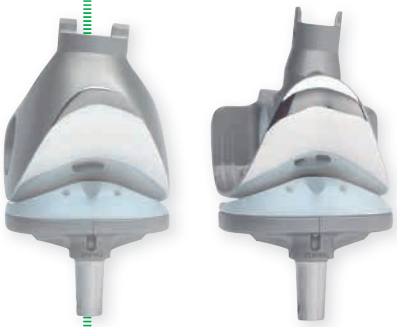

2012

Endo-Model V02

LINK changes the design of the bushing.

2013

Endo-Model Standard and Endo-Model – M with LINK PorEx

The Endo-Model Knee System with LINK PorEx technology is available for metal-sensitive patients.

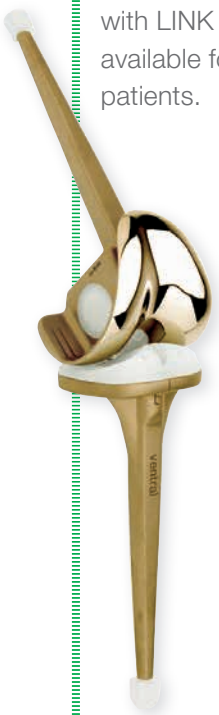

2013

MIRETO Instrumentation

Instruments are available for the Endo-Model Knee System. The instruments provide a bone-sparing reliable and precise resection for the user.

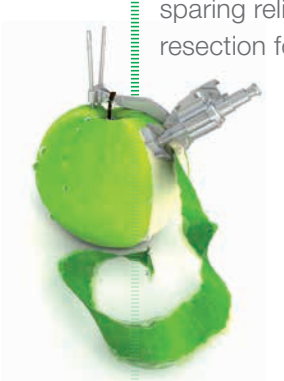

2018

Patella Components

With 3 pegs available.

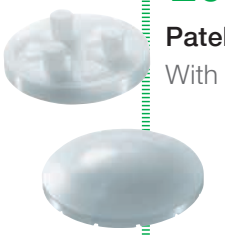

2018

Endo-Model – W

Pure Hinge Knee version (MEGASYSTEM-C compatible).

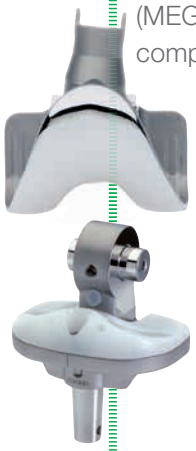

2019

Endo-Model – W

(MEGASYSTEM-C compatible) Total Condylar Replacement, slim version.

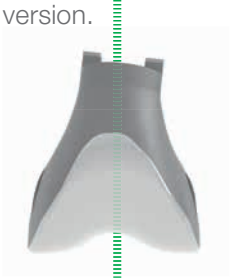

2000 2010 2018 2019

Endo-Model Standard

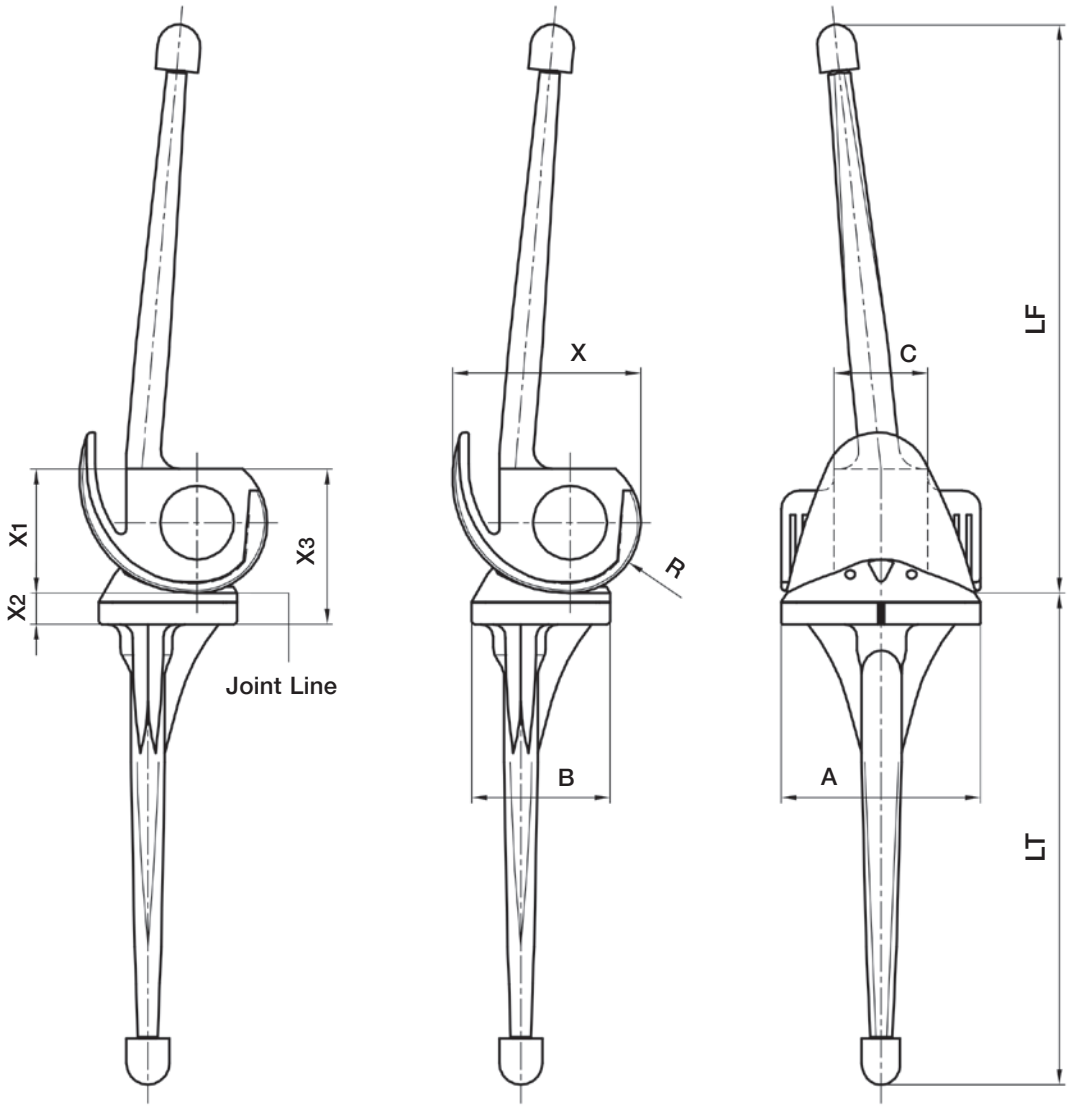

Size	A mm	B mm	C mm	X mm	R mm
XS	55	42	28	50	17
S	60	45	30	57	20
M	65	45	30	62	23
L	75	48	35	65	25

Size	LT* mm	LF* mm	A mm	J mm
XS	120	160	55	14
S	160	182	60	14
M	160	185	65	14
L	160	190	75	14

Box Dimensions Size	X1 mm	X2 mm	X3 mm
XS	33	10	43
S	36.5	10	46.5
M	40.5	10	50.5
L	44.5	10	54.5

Endo-Model – M

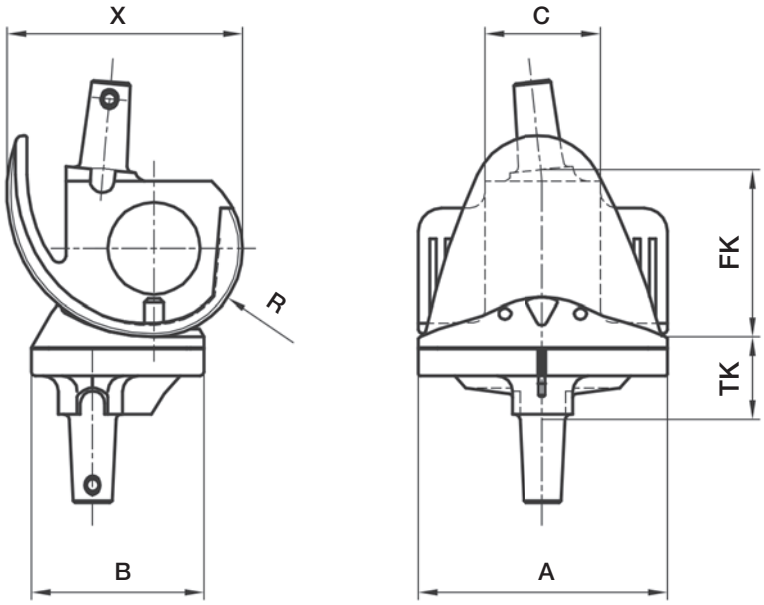

Size Version	A mm	B mm	C mm	FK mm	X mm	TK mm	R mm
XS							
right	55	42	28	39	50	22	17
left	55	42	28	39	50	22	17
S							
right	60	45	30	42	57	22	20
left	60	45	30	42	57	22	20
M							
right	65	45	30	46	62	22	23
left	65	45	30	46	62	22	23
L							
right	75	48	35	50	65	22	25
left	75	48	35	50	65	22	25

Endo-Model Standard/Endo-Model – M

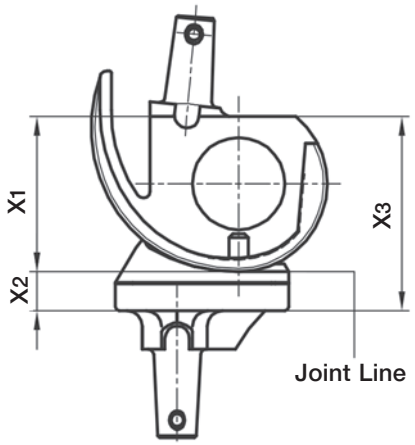

Box Dimenesions Size	X1 mm	X2 mm	X3 mm
XS	33	10	43
S	36.5	10	46.5
M	40.5	10	50.5
L	44.5	10	54.5

Endo-Model – M Stems

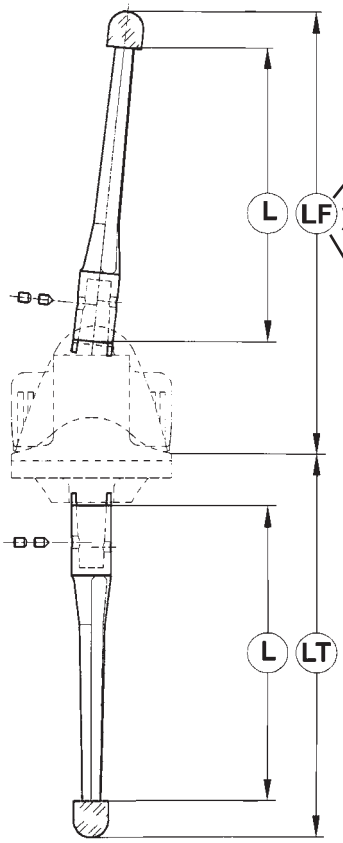

LF1 = with femoral components, x-small

LF2 = with femoral components, small

LF3 = with femoral components, medium

LF4 = with femoral components, large

Joint Line

Centralizers for positioning the stem central in the medullary canal are supplied separately.

Endo-Model – M Stems, conical cemented

	Assembly length**				
	Tibia		Femur		
L mm	**LT** mm	**LF1** mm	**LF2** mm	**LF3** mm	**LF4** mm
50	87	104	107	111	114
80	117	134	137	141	144
95	132	149	152	156	159
120	157	174	177	181	184
135	172	189	192	196	199
160	197	214	217	221	224
200	237	254	257	261	264
240	277	294	297	301	304
280	317	334	337	341	344

** Assembly length incl. centering star unit joint line

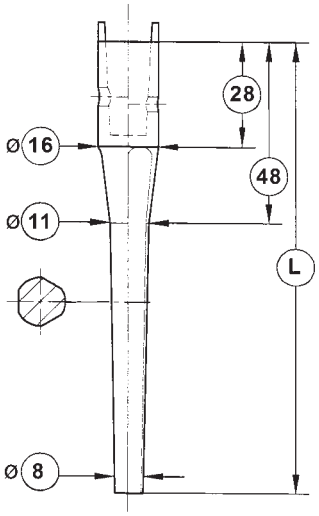

Endo-Model – M Stems, conical cementless

	Assembly length**				
	Tibia		Femur		
L mm	LT mm	LF1 mm	LF2 mm	LF3 mm	LF4 mm
50	50	89	92	96	99
80	80	119	122	126	129
95	95	134	137	141	144
120	120	159	162	166	169
135	135	174	177	181	184
160	160	199	202	206	209
200	200	239	242	246	249
240	240	279	282	286	289
280	280	319	322	326	329

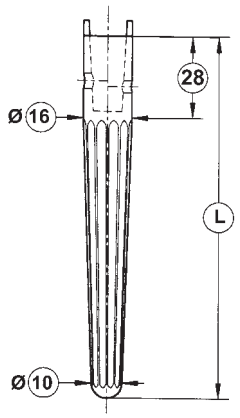

			Assembly length**				
			Tibia	Femur			
L mm	Ø A mm	Ø K mm	LT mm	LF1 mm	LF2 mm	LF3 mm	LF4 mm
60	10	16	82	99	102	106	109
60	12	16	82	99	102	106	109
60	14	16	82	99	102	106	109
60	16	16	82	99	102	106	109
60	18	18	82	99	102	106	109
120	12	16	142	159	162	166	169
120	14	16	142	159	162	166	169
120	16	16	142	159	162	166	169
120	18	18	142	159	162	166	169
160	12	16	182	199	202	206	209
160	14	16	182	199	202	206	209
160	16	16	182	199	202	206	209
160	18	18	182	199	202	206	209
200	12	16	222	239	242	246	249
200	14	16	222	239	242	246	249
200	16	16	222	239	242	246	249
200	18	18	222	239	242	246	249
240	12	16	262	279	282	286	289
240	14	16	262	279	282	286	289
240	16	16	262	279	282	286	289
240	18	18	262	279	282	286	289
280	12	16	302	319	322	326	329
280	14	16	302	319	322	326	329
280	16	16	302	319	322	326	329
280	18	16	302	319	322	326	329

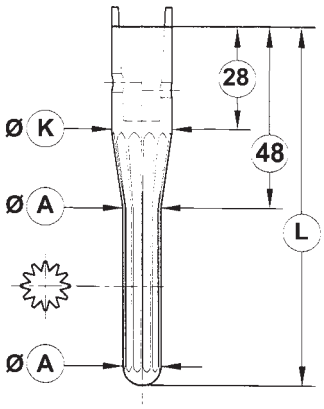

1. G. Petrou et al.; **Medium-term results with primary cemented rotating-hinge total knee replacement - A 7- to 15- year follow-up**, *THE JOURNAL OF BONE & JOINT SURGERY (Br), 2004*
2. E.Nieder et al.; **Mid-term results of 1837 cases at Primary Knee Arthroplasty Follow-up period 2-12 years (mean 6.6 years)** *Scientific Exhibition: 20th SCIOT World Congress, 1996*
3. NJR 2017 Report
4. A.N. Mavrodontidis, S.I. Andrikoula, V.A. Kontogeorgakos, G.C.Babis, T.A. Xenakis, A.E. Beris; **P.N. Soucacos Application of the Endo-Model Rotating Hinge Knee Prosthesis for Knee**; *Osteoarthritis Journal of surgical orthopaedic advances, 2008*
5. T. Gehrke, D. Kendoff, C. Haasper; **The role of hinges in primary total knee replacement;** *THE BONE & JOINT JOURNAL, 2014*
6. F. Sanguineti et al.; **Total knee arthroplasty with rotating-hinge Endo-Model prothesis: clinical results in complex primary and revision surgery**; *Arch Orthop Trauma Surg, 2014*
7. Engelbrecht; **Die Rotationsendoprothese des Kniegelenks**; *Springer Verlag,1984 (Page 53-65)*
8. L. Felli, M. Coviello, M. Alessio-Mazzola, M. Cutolo; **The Endo-Model rotating hinge for rheumatoid knees Orthopäde**; *2016*
9. A. Atrey, N. Hussain, O.Gosling, P. Giannoudis, A. Shepherd, S. Young, J. Waite; **A 3 year minimum follow up of Endoprosthetic replacement for distal femoral fractures - An alternative treatment option**; *Journal of Orthopaedics, 2017*
10. Bistolfi, G. Massazza, F. Rosso, C. Olivero, F. Lagalla, M. Crova; **Results with the Endomodell rotating hinged knee prothesis after 18 years of follow-up**; *University of Turin: Department of Orthopedics and Traumatology*
11 Morgan-Jonhes et al.; **Zonal fixation in revision total knee arthroplasty;** *THE BONE AND JOINT JOURNAL, 2015*
12 Giles R. Scuderi, Alfred J. Tria; **Knee Arthroplasty Handbook: Techniques in Total Knee and Revision Arthroplasty, Chapter 9: Classification of Bone Defects Femur and Tibia (Gerard A. Engh)**; *Springer Science & Business Media, 22.06.2006*
13 Bader et al., **Alternative Werkstoffe und Lösungen in der Knieendoprothetik für Patienten mit Metallallergie**, *Orthopäde, 2008*

Further Information

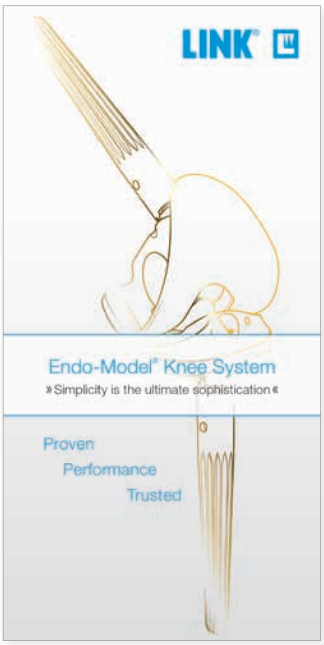

For more information please register for our LINK Media Library (linkorthopaedics.com)

Important Information

Please note the following regarding the use of our implants:

1. **Choosing the right implant is very important.**
   The size and shape of the human bone determines the size and shape of the implant and also limits the load capacity. Implants are not designed to withstand unlimited physical stress. Demands should not exceed normal functional loads.

2. **Correct handling of the implant is very important.**
   Under no circumstances should the shape of a finished implant be altered, as this shortens its life span. Our implants must not be combined with implants from other manufacturers. The instruments indicated in the Surgical Technique must be used to ensure safe implantation of the components.

3. **Implants must not be reused.**
   Implants are supplied sterile and are intended for single use only. Used implants must not be used again.

4. **After-treatment is also very important.**
   The patient must be informed of the limitations of the implant. The load capacity of an implant cannot compare with that of healthy bone!

5. **Unless otherwise indicated, implants are supplied in sterile packaging.**
   Note the following conditions for storage of packaged implants:
   - Avoid extreme or sudden changes in temperature.
   - Sterile implants in their original, intact protective packaging may be stored in permanent buildings up until the "Use by" date indicated on the packaging.
   - They must not be exposed to frost, dampness or direct sunlight, or mechanical damage.
   - Implants may be stored in their original packaging for up to 5 years after the date of manufacture. The "Use by" date is indicated on the product label.
   - Do not use an implant if the packaging is damaged.

6. **Traceability is important.**
   Please use the documentation stickers provided to ensure traceability.

7. **Further information** on the material composition is available on request from the manufacturer.

Follow the instructions for use!

Waldemar Link GmbH & Co. KG, Hamburg

Waldemar Link GmbH & Co. KG
Barkhausenweg 10 · 22339 Hamburg · Germany
Phone +49 40 53995-0 · info@linkhh.de
www.linkorthopaedics.com